PARKING HEATER PRODUCTS®

51W COOLANT HEATER

Technical Description

Installation Instructions

Operating Instructions

Troubleshooting and Parts

Table of Contents

Introduction

Thank you for purchasing our 51W heater.

The 51W heater is designed to preheat your engine by using on-board diesel fuel and battery systems. Operation is simple and the heater provides a safe and reliable alternative to cold engine starting or need for electrical plug ins.

Please take a moment to familiarize yourself with this manual, safety warnings and heater requirements before installing or operating your heater.

Heater Warnings

Special Notes

Note: Highlight areas requiring special attention or clarification.

Caution

Indicates that personal injury or damage to equipment may occur unless specific guidelines are followed.

Warning

Indicates that serious or fatal injury may result if specific guidelines are not followed.

⚠ Warning - Installation Hazards

- The installation of this kit requires trained decision-making concerning locating and integrating components, tying components together, rerouting, or relocating OEM components, etc.
- It is impossible to describe all of the safety and operational considerations in the installation instructions. Therefore, the technician must exercise professional judgment to achieve a safe and quality installation.
- Read and understand this manual before attempting to install the heater.
- Failure to follow all these instructions could cause serious or fatal injury.

⚠ Warning - Explosion Hazards

- Heater must be turned off while re-fueling.
- Do not install heater in enclosed areas where combustible fumes may be present.

⚠ Warning - Fire Hazards

- Exhaust pipe must maintain a minimum a distance of 50mm (2") from any flammable or heat sensitive material.
- Ensure there are no leaks in the fuel system.

⚠ Warning - Asphyxiation Hazards

- Ensure that exhaust fumes cannot enter passenger compartments.

⚠ Warning - Burn Hazards

- Ensure a proper mixture of water and antifreeze to prevent coolant from Freezing.
- Ensure that the coolant flow can never be blocked while heater is in operation.
- Blocking coolant flow can result in extreme pressure, bursting hoses and release of scalding coolant.

Caution - Operational Considerations

Bio-Diesel

This heater is not designed for use with straight bio-diesel (Blends of bio-diesel up to 10% are acceptable)
Operating outside of these conditions may plug the heater with soot and result in combustion failure.

High Altitudes

This heater is not designed to operate continuously at altitudes above 1500 meters (4920').
Operating in these conditions may plug the heater with soot and result in combustion failure.

Specifications

Principal Dimensions

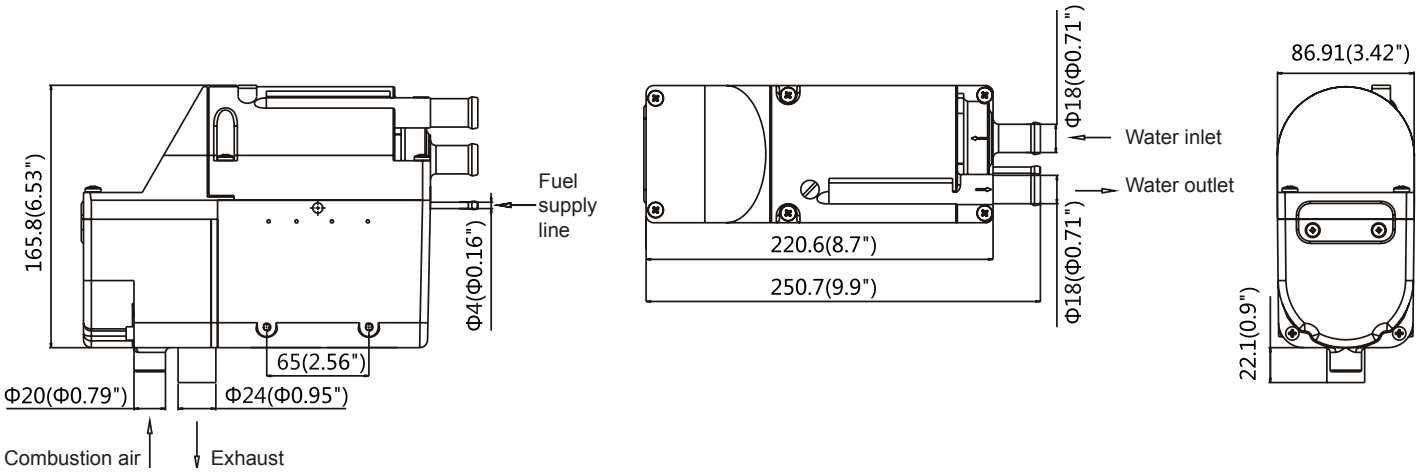

Performance Specifications	
Heating Medium	Water / Ethylene Glycol Mixture
Fuel	Diesel
Heating Output	High – 5.0 KW (17,060 BTU) Low – 2.2 KW (7,500 BTU)
Fuel Consumption	High – 0.61 L/hr (0.16 US Gal/hr) Low – 0.25 L/hr (0.07 US Gal/hr)
Rated Voltage	12 VDC or 24 VDC
Power Consumption Watts	High – 53W Low – 27 W Startup – 120 W
Operating Voltage Range: Minimum Voltage	10.2 V or 21V Under-voltage protection will shutdown the units when the voltage drops to this value
Operating Voltage Range: Maximum Voltage	16 V or 32V Over-voltage protection will shutdown the units when the voltage reaches this value
Allowable Operating Pressure	1 bar (15 PSI)
Water Capacity (Heater)	0.175 L (0.046 US Gal)
Water Through Capacity	850-1000 L/h (225-265 US Gal/h) At 10 Kpa Operational Pressure
Minimum Water Through-put	240 L/h (63.50 US Gal/h)
Allowable Ambient Temperature	-40°C to 80°C -40°F to 176°F
Dry Weight	3.1 kg (6.8 lbs)

Above Specifications (± 10%)

Main Components and Operating Concept

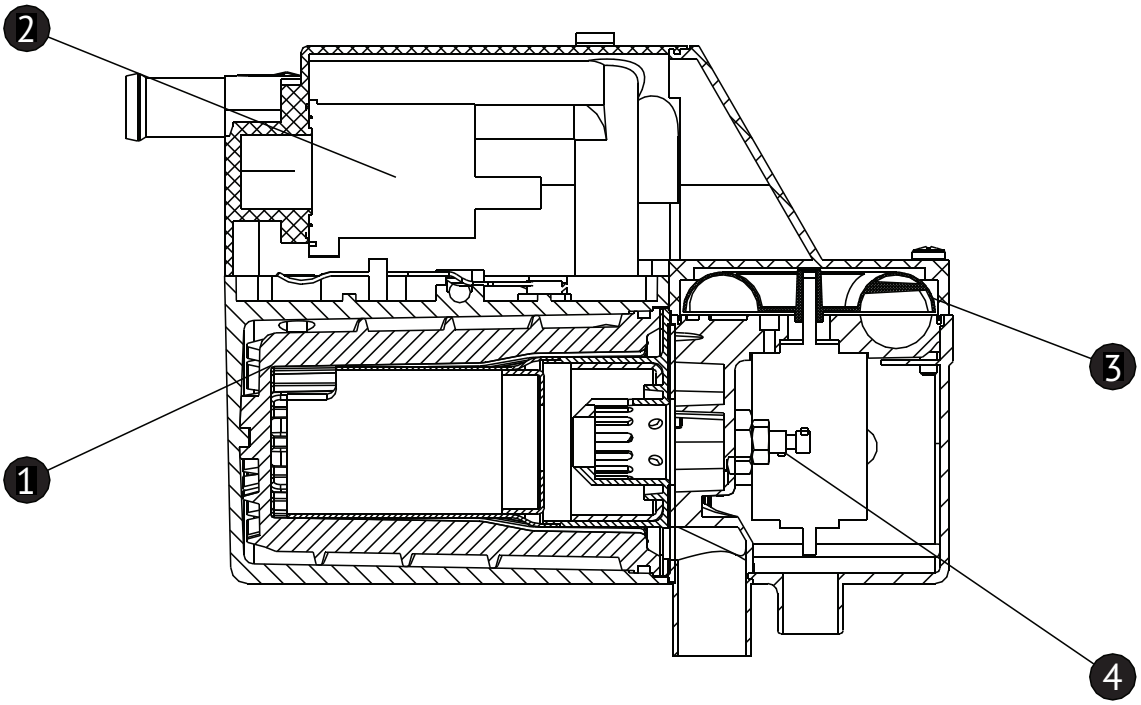

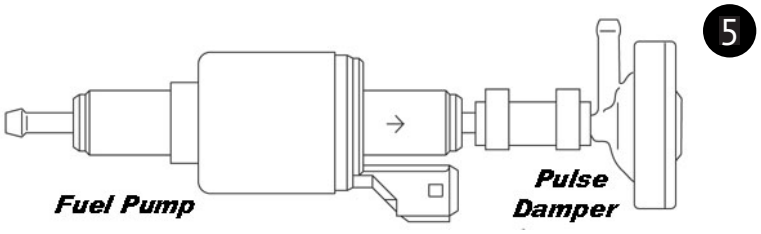

1. Heat Exchanger
2. Integrated Coolant Pump Assembly
3. Combustion Air Blower
4. Glow Pin
5. Fuel Metering Pump

Basic Operation of Heater

- Fuel is delivered to the heater via the heater's fuel pump.
- Combustion air is delivered to the heater via the heaters 12v combustion air blower.
- Fuel is atomized and the fuel / air mixture is ignited using a glow pin.
- The flame is contained in a flame tube and exhaust gases expelled.
- The heater's coolant pump takes cold coolant from the engine, circulates it through the heater's water jacket, then it pumps hot coolant back to the engine.

Heater Kit List

Part Number	QTY	Description
P51W-T801	1	Heater
P65D-X302	1	Standard Operating Switch
P65D-X301		Operating Switch-7 day Timer (option)
P51W-X703	1	Heater Mounting Bracket
P65W-X303	1	Wiring Harness 5M (16') Power Harness, 20A Fuse 2.5M (9') Fuel Pump Harness 5M (16') Switch Harness, 5A Fuse 2.5M (8') Remote Sensor Harness
U65D-X508	1	Flexible Stainless-Steel Exhaust, 1M x 24mm with End Cap
U51W-X501	1	Combustion Air Intake Tube, 1M x 20mm
U65D-X405	1	Fuel Pickup Tube & Fuel Tube Hardware Kit
NPN	2	In-Line Plumbing Union, 20mm (3/4")
NPN	2	Plumbing "Y" 20mm (3/4")
P65D-T401	1	Fuel Metering Pump
U65D-X404 U65D-X407 U65D-X414	 1 1	**Fuel System Hardware** Fuel Pump Holder Black Rubber Fuel Line, 4.5mm ID x 0.5M
U65D-X409 U65D-X403 U65D-X401 U65D-X402 U65D-X705	6 1 12 1 10	4.5mm ID x 50mm Rubber Fuel Line Connectors Clear Nylon Fuel Line, 8M (26') 2.0 mm ID Small Fuel Line Clamps, 9-11 mm Fuel Filter Cable Ties, Medium Grade

Heater Kit List

P51W-X710		**Installation Hardware**
U65D-X706	2	"L" Brackets
U65D-X707	1	"Z" Mounting Bracket
U65D-X502	1	26 – 28 mm Exhaust Clamp
U65D-X701	2	28 mm "P" Routing Clamp
NPN	3	Tek Mounting Screws M6 x 25 mm
U65D-X521	1	11-25 mm hose clamp
NPN	10	M6-1 x 25 Hex Head Screw
NPN	10	M6-1 Hex Nuts
NPN	10	6mm Wave washers
NPN	10	6mm Flat Washer
NPN	1	Hex Socket Cap Screw, M6 x 110
U65D-X702	10	Water Hose Clamps 18mm-32mm, 12mm Wide
		Literature Bag
	1	Packing List
	1	5 amp Fuse (Extra)
	1	20 amp Fuse (Extra)
	1	Spare Fuel Filter (Internal)
	1	North American Manual

Heater Mounting

Mounting Considerations

- Protect from road spray
- Mount below engine coolant level to avoid air blockage.
- Keep coolant hoses short to maximize flow and minimize heat loss.
- Keep power wiring short to minimize voltage drop.
- Keep fuel lines short to ensure good combustion.

Suggested Locations

- Step box
- External storage compartments (Not inside cab)
- Inside frame rail
- Inside engine compartment

⚠ Warning - Asphyxiation Hazards

Do not mount the heater inside passenger compartments where poisonous exhaust fumes may be inhaled.

Caution

Guard the heater against excessive road spray to minimize corrosion and avoid ingestion of debris.

Mounting

Mount the heater using the mounting bracket provided with the installation kit.
Provide shielding as required to protect the heater from environmental conditions.
Orientate the heater within permissible mounting configurations shown in Figure M1.

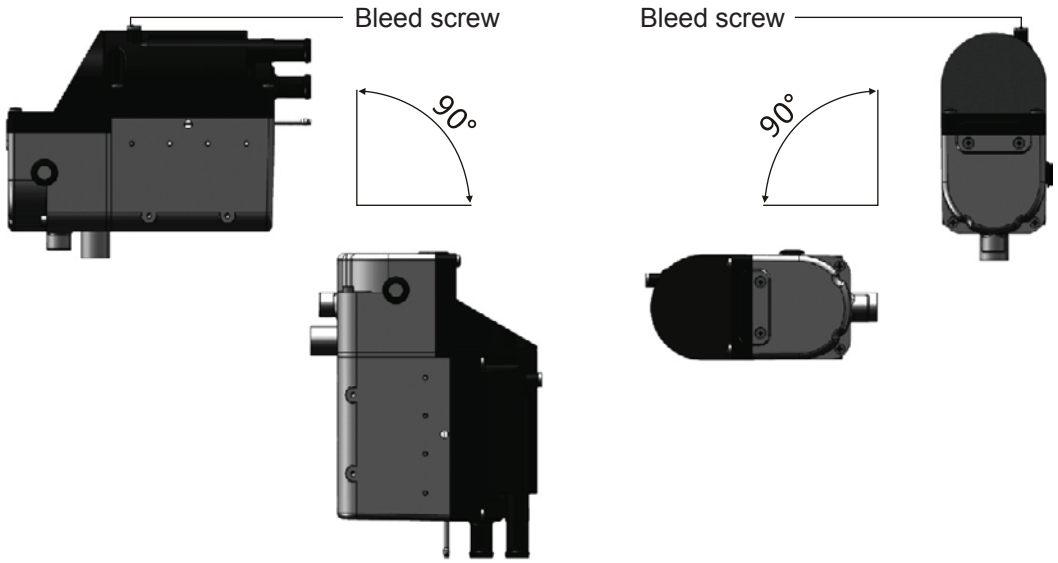

Note:

Bleed screw must be upward

Exhaust & Combustion Air Intake Connections

The combustion air intake channels clean air into the heater. It can be eliminated if not required to ensure clean air intake.
The exhaust tube channels exhaust safely away from the heater and vehicle. It also assists in providing a required amount of back pressure required to balance the combustion process.

Exhaust Considerations:

- The exhaust is made using a heat resistant, 24 mm flexible, stainless steel tube.
- Secure the exhaust tube to the heater using the exhaust clamp provided.
- Discharge exhaust away from passenger compartment.
- Ensure exhaust fumes cannot be sucked into combustion air intake.
- Install exhaust pipe with incline for moisture run off.
- Drill a small drain hole at low point if proper incline cannot be maintained.
- Route the exhaust pipe from the heater using "p" clamps provided.
- Route away from the vehicle slip stream.

Combustion Air Intake Considerations:

- The combustion air intake is made from a flexible, water resistant, paper / aluminum compound.
- Secure the combustion air intake tube to the heater using the clamp provided.
- Draw air from a clean air source away from water, dust and exhaust.
- The combustion air opening must be kept free at all times.
- Install combustion air intake tube with an incline for moisture run off.
- Route the combustion air intake using "p" clamps provided.
- Route away from the vehicle slip stream.

Exhaust & Combustion Air Intake Connections

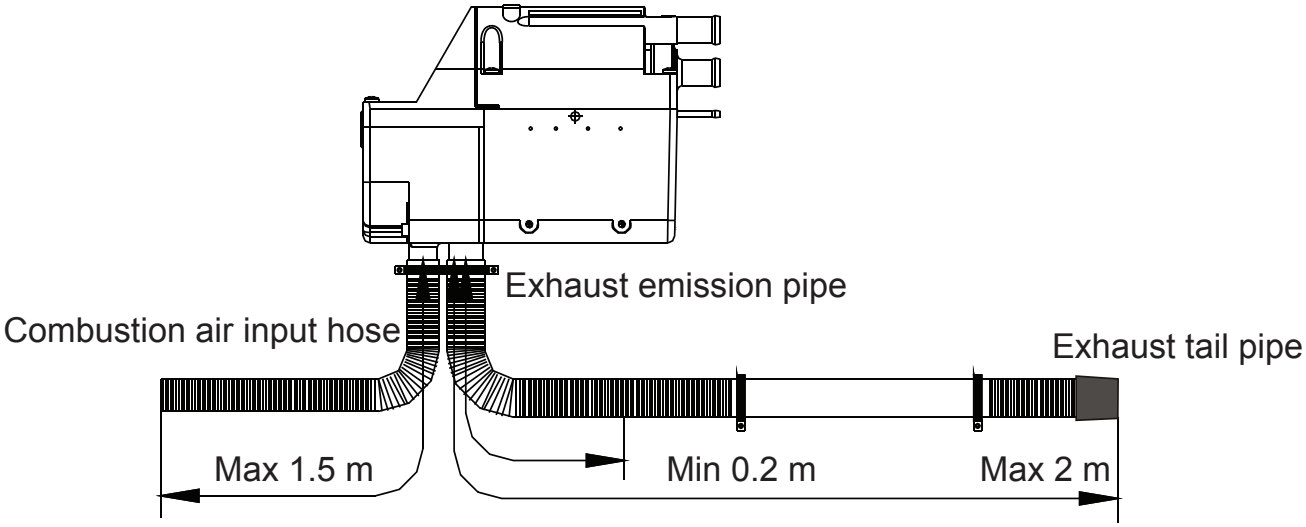

⚠ Warning - Fire Hazard

The exhaust is hot, keep a minimum of 5 cm (2”) clearance from any heat sensitive material.

⚠ Warning - Asphyxiation Hazards

Route exhaust beyond the skirt of the cab and outside of the frame area.
Failure to comply with this warning could result in Carbon Monoxide Poisoning.

Heater Plumbing

Understand that connecting your heater to the engine makes it an integral part of the engine's cooling system. It is impossible to describe all of the safety and operational considerations in these installation instructions. Therefore, the technician must exercise professional judgment to achieve a safe and quality installation. It is important to try to optimize the coolant flow to get the best heat distribution and heater operation.

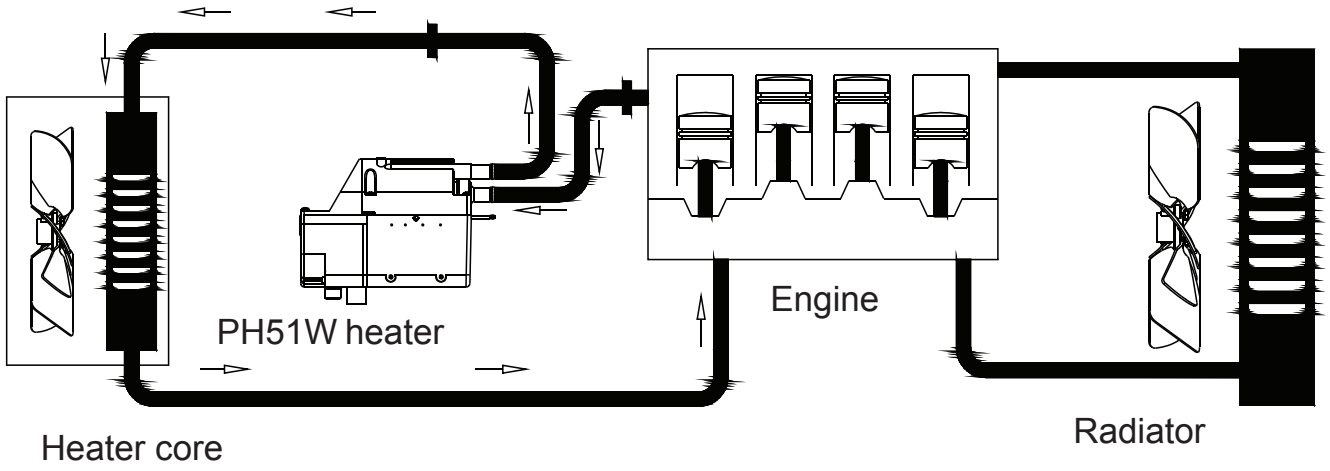

Engine cooling system

Installation Procedure:

- Plan the heater plumbing circuit.
- Install fittings, valves and run hoses as required.
- Bleed the air out of the system (Run engine to help circulate coolant).
- Top up coolant as required.
- Test the heater to ensure proper flow.

Heater Plumbing

Plumbing Guidelines:

- Use 3/4" hoses to optimize coolant flow.
- Keep the pick up and return points as far apart as possible.
- Take coolant from a high pressure point of the engine (ie. back of block)
- Return coolant to a low pressure point of the engine (ie. engine's coolant pump).
- Use ball valves to isolated the system when not in use.
- Take the coolant from a low point on the engine to minimize aeration.
- Mount heater and coolant pump low to allow the purging of air.
- Consider using insulation around the hoses.
- A heat exchange can be incorporated into the system. However, ensure that the heater flow can never be completely blocked by a flow control valve.

⚠ Warning - Burn & Explosion Hazard

- Do not work on the plumbing system when it is hot or under pressure.
- Do not work on the heater or plumbing system when the heater or engine are in operation.
- Always wear safety gloves and appropriate eye protection.
- Ensure system has pressure relief protection limiting maximum system pressure to 15 PSI (1 bar).
- Coolant flow must never be blocked during heater operation (ie. flow control valves).

Caution

The coolant liquid must contain at least 10% antifreeze all year round as a corrosion protection.

Tech Tip:
Test the flow by feeling the incoming and outgoing hoses. In a system with proper coolant flow, the output temperature will not exceed the input temperature by more than 10°C (18°F).

Fuel System

The 51W fuel pump and fuel system are the heart of the heater. The fuel pump not only delivers fuel to the heater but also controls the amount of fuel delivered. The pump is designed to operate like an electric solenoid and works using electric pulses. Each time it is energized, it provides a measured dose of fuel. It is critical to the heater's operation to stay within parameters outlined below and only use the components provided. (Figure F1)

*Figure F1

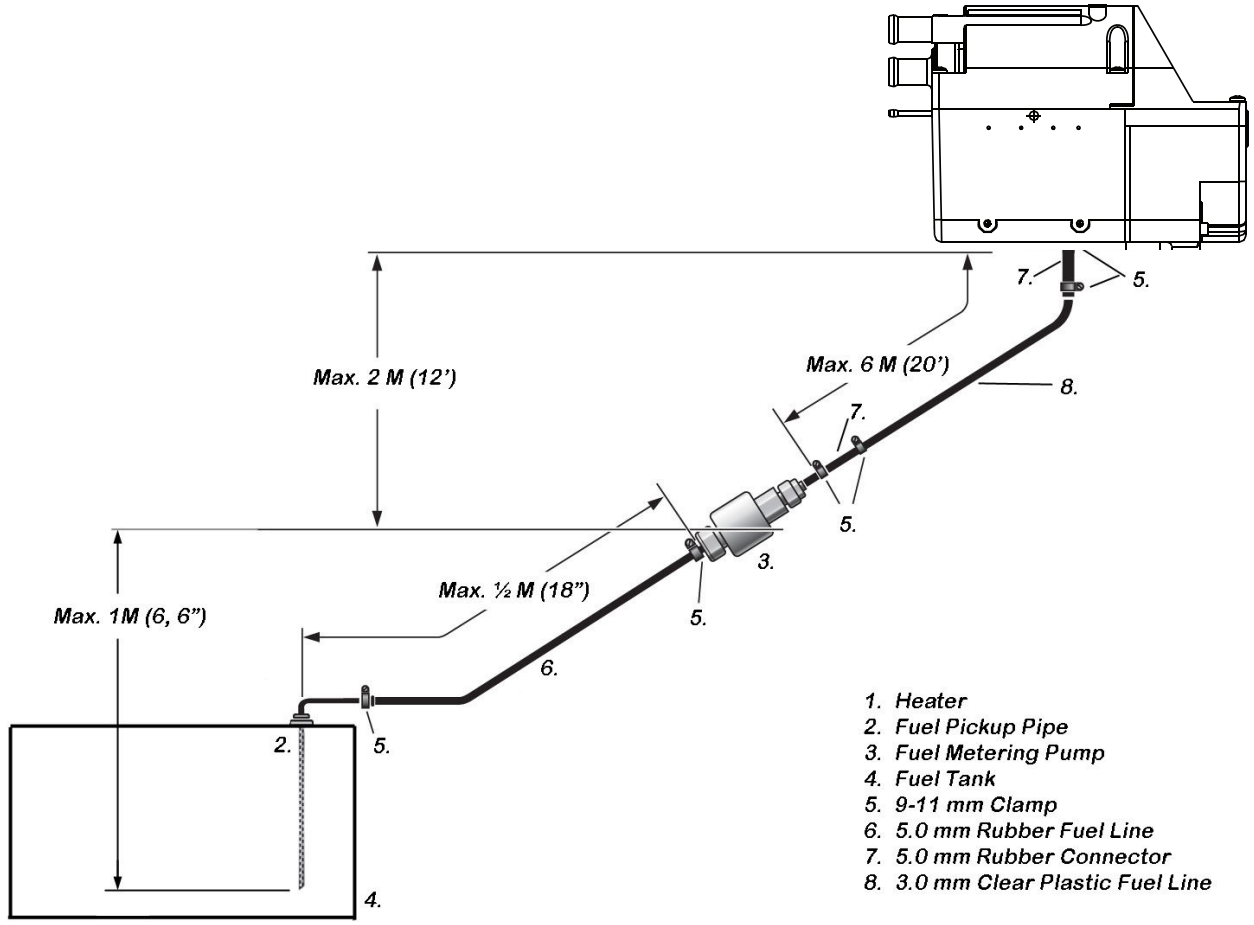

Fuel System

*Figure F2

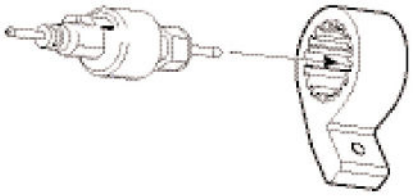

*Figure F3

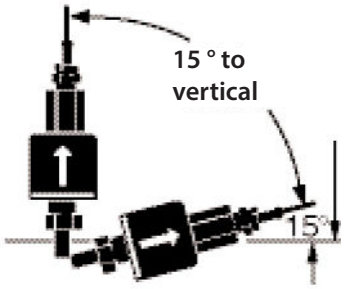

Fuel Pump Mounting

- Using the bracket and rubber mount provided, install fuel pump as shown. (Figure F2)
- Isolating the pump with the rubber holder helps to minimize noise created during operation.
- Ensure that the proper mounting angle is observed to avoid cavitation. (Figure F3)

Fuel Pickup Pipe

*Figure F4

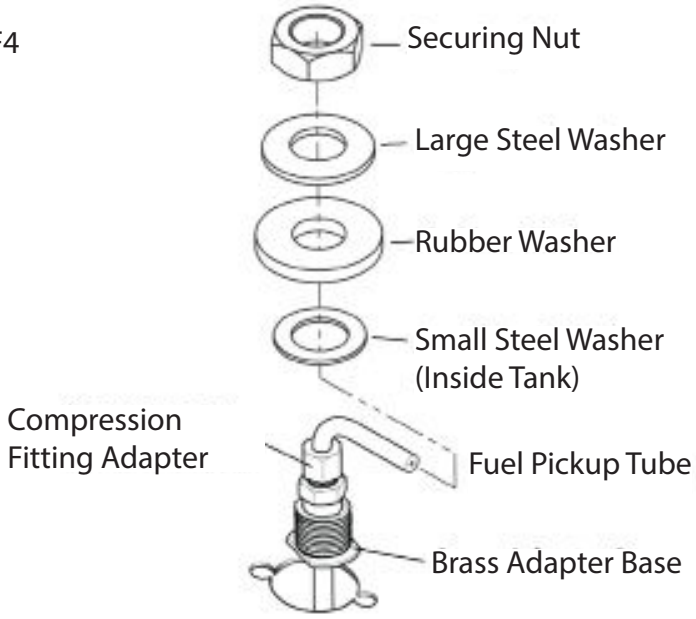

Fuel Source

- Connect directly into the fuel tank using our dedicated fuel pickup tube.
- Teeing into the existing vehicle fuel lines is not recommended.
- There are three common methods to install a fuel pickup tube.
- Use NPT / compression fittings if available
- Use spare fuel gauge plate if available
- Drill dedicated holes into the tank.

*Figure F5

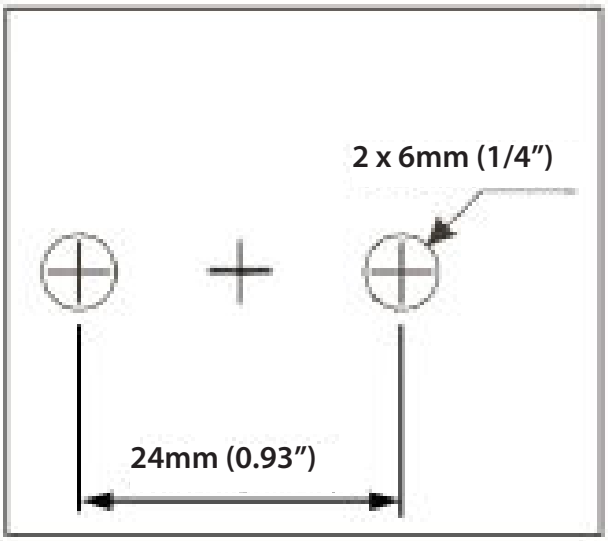

*Figure F6

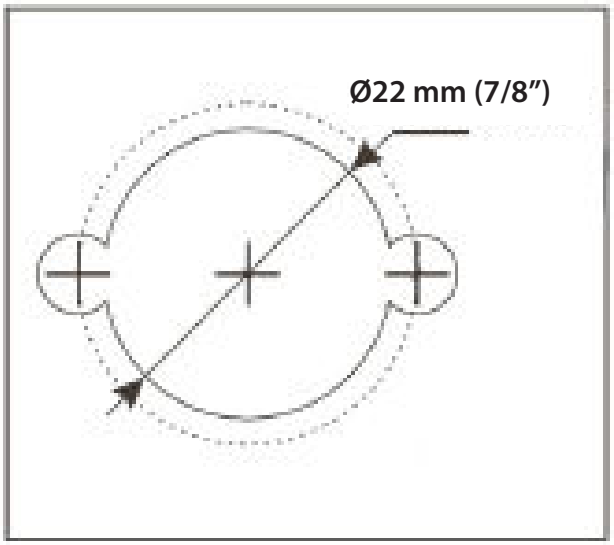

Fuel Pick-Up Pipe Installation (Drill Option)

- Drill mounting holes in tank to accommodate pick-up pipe as shown in Figure F4
- Drill the two (1/4") holes first. (Figure F5)
- Drill a 7/8" hole. (Figure F6)
- Mount the fuel pick-up assembly pipe as shown.
- Position pick-up pipe 4" from bottom of tank (1" for flat tanks)

Fuel Line Connections

- Route fuel lines from the fuel pick-up pipe to the heater.
- Use only fuel lines provided (Other sizes or types of fuel lines may inhibit proper fuel flow)
- Make proper butt joints using clamps and connector pieces as shown.
- Use a sharp utility knife to cut plastic fuel lines to avoid fuel line pinching.

Electrical Connections

Electrical System Installation

- Route cables using either an existing cable passage or drill holes as required.
- Seal the hole around the cables and make sure they are protected from chaffing and pinching.
- Cut each harness section to length and install terminals and connectors as required.
- Below is a summary of the wiring connections required.

A. Main Heater Harness	Connects switch and power harness to the heater harness. Refer to Main Harness Connections Legend for details.
B. Power Harness	2 Core, 5M (16') Long – Red & Black • Route power harness section from heater to vehicle batteries. • Attach red wire ring terminal to battery (+). • Connect brown wire ring terminal to battery (-) • Install 20 amp main fuse (Last step of installation)
C. Switch Harness	5 Core, 8M (25') Long – Red, Black, Yellow, Brown, Orange • Route switch harness section from heater to switch location. • Attached connector to operating switch • This circuit is protected by a 5 amp fuse located near the main harness connection
D. Fuel Metering Pump Harness	2 Core, 5M (16') Long – Purple & White • Route fuel metering pump harness to fuel pump and connect • No polarity required –Connect either wire to either terminal

Electrical Connections

51W Wiring Diagram

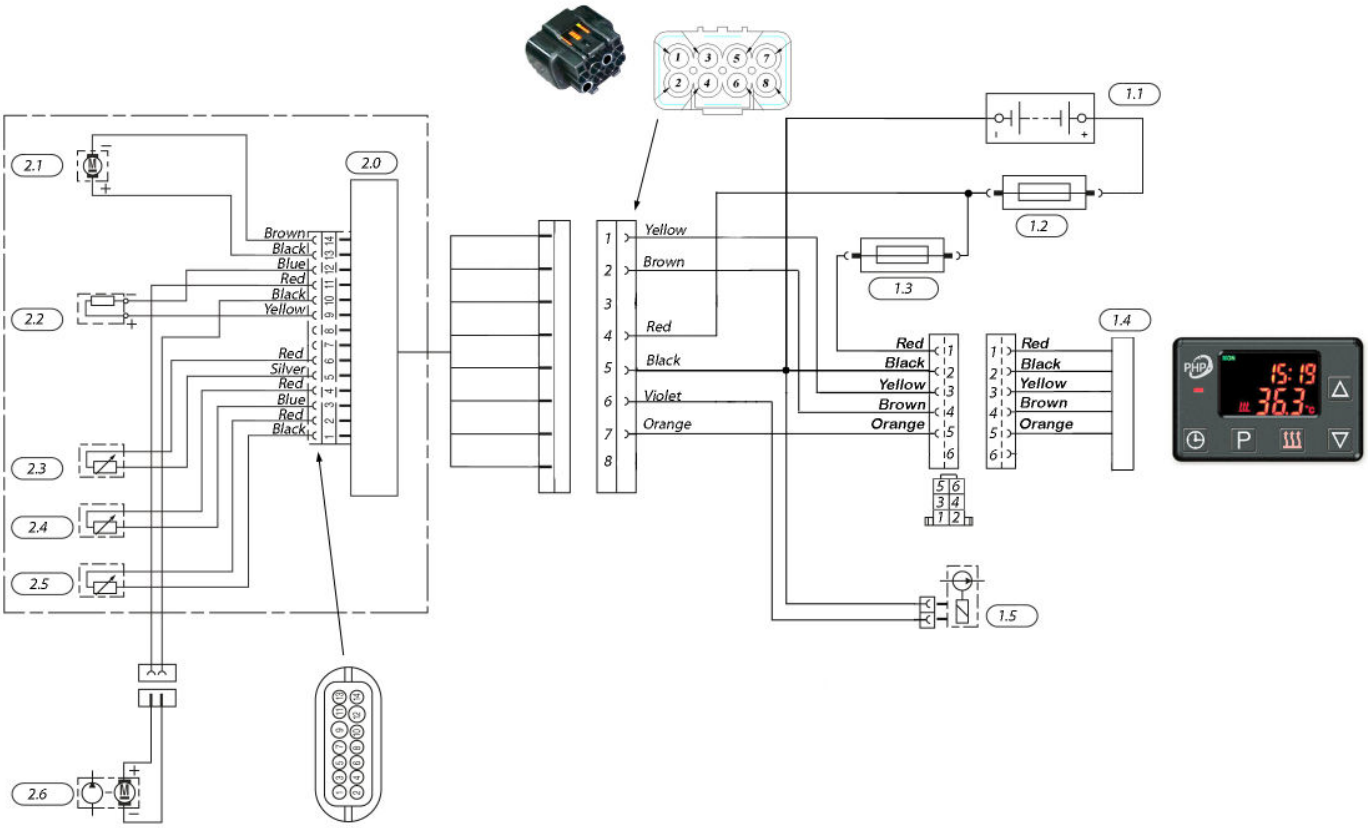

1.1	Battery
1.2	Main Fuse (20A for 12v), (15A for 24v)
1.3	Switch Fuse 5A
1.4	Control Switch
1.5	Fuel Metering Pump
2.0	Electronic Control Unit
2.1	Combustion Air Blower Motor
2.2	Glow Pin
2.3	Flame Sensor
2.4	Inlet Temperature Sensor
2.5	Outlet Temperature Sensor
2.6	Water Pump

Operating Switch

The 51W is provided with a multifunctional controller. It is capable of manual and timer controlled switching of the heater and conveys heater operational parameters and diagnostics.

Mount Operating Switch in a suitable location using the keyed mounting holes or two sided tape provided. Route the switch harness from the heater to the Operating Switch and connect.

Overview:
The PHP Control Switch allows you to turn the heater on and off, regulate temperature, set operating mode, timed shutdown and timed start-up functions. It also facilitates troubleshooting by providing diagnostic codes.

Features:

- Displays current time and day of the week.
- Start heater up to 7 days in advance.
- Program two or more different starting times per day.
- Program up to 30 different start times
- Diagnostic retrieval
- Displays systems analysis
- Programmable (Customizable)

Operating Switch

Operation Buttons and Display Icons:

Programming Keys:	**Display Icons:**
1. On / Off	6. Fault
2. Program	7. Heating Mode
3. Time	8. Single Programmed Start
4. Down	9. Multiple Programmed Starts
5. Up	10. MON TUE WED THU FRI SAT SUN Days

On / Off Control:

Press To start heater Heater will operate for 120 minutes or until switched off manually.	Displays and heater will begin start-up Set Point Temperature flashes for 5 sec. Actual Temperature displays after 5 sec.
Press To stop heater	Display disappears and heater begins shut-down

Temperature Setting (Air Heaters Only)

During heater operation, Press or to set the desired temperature.	Desired temperature setting is displayed in ºC or ºF After 10 seconds without activity, current setting is saved

Operating Switch

Setting Time & Day

Press Three times	Flashes
Press To enter setting mode	Displays Day, Hour, and Minutes
Press To alternate between day, hour, and minute settings.	Active Selection Flashes
Press or To adjust settings.	After 10 seconds without activity, current setting is saved

Establishing Single Programmed Start (Heater must be in off mode)

Press Once	and Flash
Press To enter setting mode	Hours or Minutes Flash
Press To alternate between hour & minute settings.	Active Selection Flashes
Press or To adjust settings	After 10 seconds without activity, current setting is saved. Remains displayed to indicate that program is activated and will operate the heater at the desired start time, once for 120 Minute run times.
To Deactivate Press then	Will disappear

Establishing Multiple Programmed Start Times

1. Press Two times	Flashes
2. Press Once	Flashes and shows Day, Hours, Mins, and d00 (d00 is the first Startup Selection, followed by d01, d02, etc).
3. Press or To toggle through different Startup Selections.	Settings for each Startup Selection d00, d01, d02, d03, etc. Are displayed.
4. Press To alternate between either setting or selecting Startup Selections	When Flashing, toggle through Startup Selections. When Solid, edit current Startup Selection.
5. Once Is solid, Press To alternate between day, hour, minute and run time settings (30-180 mins).	Active Selection Flashes Day, Hour, Minute and run time settings.
6. Press or To adjust settings	Active Selection Flashes
7. Press To **Activate** or **Deactivate** the current Startup Selection	Will remain illuminated when current Startup Selection is activated to confirm it has been **activated**
8. Repeat steps 2 through 7 to establish and activate additional Startup Selections	Will remain illuminated for each Selection that has been activated.
9. Once desired starts are activated, wait 10 seconds for program to exit this menu.	Will remain illuminated along with the current day and time setting, to confirm that the timer has been activated.

Important Notes:

1. The timer's default setting is set for 7 startup times. This setting can be changed. (See "Setting System Parameters")

2. Once the timer switches the heater on through a programmed start time, it can only be switched off manually after one minute of run time.

3. Once activated, Programmed Start Times will remain active and repeat weekly until they are deactivated.

To Deactivate All Programmed Start Times At Once:

Press Four times	& **CLd** flashing
Press Once	**CLd** stops flashing
Press Once	**ALL / OFF** flashing
Press Once to exit	Will no longer be illuminated on home screen.

To Establish Delayed Shutdown:

Note: Heater must be running to set delayed shutdown.

Press Once to start heater	Displays and heater will begin start-up
Press To enter Delayed Shutdown menu	All flashing
Press To enter setting mode	Flashes
Press To alternate between hour & minute settings.	Active Selection Flashes
Press or To adjust settings	Active Selection Flashes
Press To confirm setting. Do not press any key for 10 seconds to allow program to exit.	After 10 seconds without activity, current setting is saved. Remains displayed to indicate that program is activated and will operate the heater until the set time.

To Cancel Delayed Shutdown:

Press Once	
Press Once to cancel delayed shutdown and stop heater	Disappears

Self Diagnostics:

If the heater's controller detects a fault during operation, will flash and an error code will be displayed on the timer. If multiple faults are detected, they will circulate on the screen display.

Fault Code Table

Item	Fault Code	Indication
1	E01	The power supply voltage too high
2	E02	The power supply voltage too low
3	E03	Burner temperature sensor malfunction
4	E04	Inlet air/water temperature sensor malfunction
5	E05	Outlet air/water temperature sensor malfunction
6	E06	Glow pin malfunction
7	E07	Fuel pump malfunction
8	E08	Blower malfunction
9	E09	Water pump malfunction (Does not apply to air heater)
10	E10	Flame extinguish protection
11	E11	Burner overheating protection
12	E12	Outlet air/water temperature overheating protection
13	E13	Communications Error

Checking Systems Analysis

Press To start heater	and Are displayed
Press and hold For 5-10 seconds	Display enters Systems Analysis Display Mode
Press or To toggle through sensor readings.	Displays various sensor readings as illustrated in "Systems Analysis" table
Press To exit or wait 10 seconds	Display returns to operation mode and Are displayed
Press To stop heater	Time and Day are displayed and heater begins shut-down

Operating Switch

Systems Analysis Table

Item	Sensor Symbol	Sensor Meaning
1	In	Air / water inlet temperature
2	Out	Air / water outlet temperature
3	Burn	Combustion chamber temperature
4	PL	Fuel pump speed
5	FJ	Fan / water pump speed
6	Uo	Controller input voltage
7	Err1	Stored Error #1 (Most Recent)
8	Err2	Stored Error #2
9	Err3	Stored Error #3
10	Err4	Stored Error #4
11	Err5	Stored Error #5 (Oldest)
12	Hot H	Not used

Setting System Parameters:

Press and hold both ▽ and P For 10-15 seconds	Displays Parameter Number and current value
Press ● To toggle through the parameter settings	Displays Parameter Number and current value
Press △ or ▽ To adjust current settings	Displays Parameter Number and changed value
Press P To save parameter setting changes and exit	Returns to previous display mode

System Parameter Table:

Item	Parameter	Description	Default Value	Limits / Notes
1	F01	Setting the temperature initial value (Air Heaters Only)	20 ºC	F02 to F03
2	F02	Setting the temperature lower limit value (Air Heaters Only)	10 ºC	0 ºC to F03 - 1
3	F03	Setting the temperature upper limit value (Air Heaters Only)	40 ºC	F02 to 60 ºC
4	F04	Quantity of time settings per week (Minimum 7)	7	7 to 30
5	F05	Whether to use wire control temperature as the environment temperature	0	Remote Sensor Connection 0- Disabled 1- Enabled
6	F06	Initialize the timer parameters	0	Initialize the timer parameters 0-don't Initialize 1- Initialize
7	F07	Display Fahrenheit or Celsius	0	0-Display Celsius 1-Display Fahrenheit
8	F08	TBD		
9	F09	TBD		
10	F10	TBD		
11	F11	TBD		

Heater Operation

Pre-Start
- Check all fuel, electrical and plumbing connections.
- Refill the engine coolant.
- Bleed air from the coolant system & top up coolant.

Start Up
Upon signal from the operating switch, the heater conducts a sequenced start procedure.
- ECU executes electrical systems check
- Coolant pump and combustion air blower activate.
- Glow pin begins preheat (20-50 seconds)
- Fuel Metering pump starts to pulse.
- Gradual acceleration of blower and increased pulse frequency of fuel metering pump.
- Combustion is established.
- ECU recognizes temperature change via the flame sensor.
- Once acceptable level of combustion is established, the glow pin is switched off
- Typical start up is 1 ½ to 2 minutes.

Note: If the heater fails to start the first time it will automatically attempt a second start.
If unsuccessful, the heater will shut down completely.

Note: On initial start up the heater may require several start attempts to self prime the fuel system.

Running:
Upon ignition, the heater will continue to operate as follows:
- Temperature is monitored at the heat exchanger.
- Once coolant reaches 75°C (167°F), the heater will automatically switch to low heat mode. It will continue to automatically switch between low, high or standby to maintain temperatures between 65°C (149°F) and 85°C (185°F). During this period the coolant pump continues circulation and ECU monitors temperature.
- Heater continues to operate until switched off, either manually, automatically by timer or heater malfunction shutdown.

Note: If flame out occurs, heater will automatically attempt one restart.
If successful, it will continue to operate. Otherwise, it will shut down completely with a cool-down cycle.

Note: If voltage drops to 10.5 volts or rises above 16 volts, heater will shut down.

Switch Off / Cool Down:
Upon switch off;
- Heater commences a controlled cool down cycle.
- Fuel delivering stops and flame is extinguished.
- Combustion air blower and coolant pump continue to run for 3 minute cool down.
- Heater shuts off.

Heater Operation

Safety Systems

- ECU monitors operations through temperature sensor, overheat sensor and flame sensor.
- Heater will shut down the heater in case of a malfunction.
- ECU conducts circuit check on start up.
- Heater will shut down after two consecutive, unsuccessful, 90 second attempts.
- Heater automatically attempts to restart upon flame out.
- Heater will shut down in case of overheat.
- ECU monitors voltage and will shut down heater if outside 10.5V to 16.0V for 20 seconds.

⚠ Warning - Fire Hazard

The heater must be switched off while any fuel tank on the vehicle is being filled.

⚠ Warning - Asphyxiation Hazard

The heater must not be operated in garages or enclosed areas.

Maintenance, Troubleshooting & Parts

Maintenance:

Switch heater ON at least once monthly for 10 minutes
- Clear combustion air supply and the exhaust system after longer standstill periods.
- Perform an annual preseason tune up:
- Remove and inspect glow pin for wear or deformation. Clean or replace as required.
- If the heater has excessive smoking or carbon build up, disassemble and clean the heater.
- Ensure that the vehicle batteries are maintained

Note: Batteries have significantly reduced capacity in cold weather

Troubleshooting:
The 51W is equipped with self diagnostic capabilities. In the event of failure, an error code will be displayed on the operating switch. Refer to the Fault Code Diagnostic Chart for direction. In addition, consider our basic troubleshooting steps.

Basic Troubleshooting:
- Look for error code on timer and consult Fault Code Diagnostic Chart for direction.
- Ensure sufficient fuel.
- Check wiring & connections for breaks or corrosion
- Check to make sure the voltage going to the heater is not too low or high.
- Check the fuses to make sure they are not burned out.
- Remove power for 5 minutes or via main fuse at the battery, reinstall the fuse and restart.
- Install and test the heater with a new controller.
- Install a new ECU

Fault Code Chart

Error Code (Or Flashes)	Fault description	Remedy / Solution
1	Over voltage cutout	• Check vehicle charging system • Voltage must be less then 16v (32v)
2	Under voltage cutout	• Check voltage at heater during start up. • Voltage must be greater than 10.5v (21v) • Clean wire connections, charge or replace battery, check charging system
3	Burner temperature abnormal	• Check the temperature sensor connection and position • Check the temperature sensor wires for possible damage or short
4	Inlet water temperature sensor abnormal	• Check the temperature sensor connection and position • Check the temperature sensor wires for possible damage or short
5	Outlet water temperature sensor	• Check the temperature sensor connection and position • Check the temperature sensor wires for possible damage or short
6	Glow pin malfunction	• Check the voltage between glow pin terminals, it should read 12 or 24 V • Check for broken wires and loose connection, short out wires • Remove and check the glow pin for any visible damage; replace glow pin if damaged
7	Fuel pump malfunction	• Check resistance of glow pin coil (9-10 Ω) • Check for electrical pulses at fuel pump with test light. • Inspect wiring and connections. • Check for blockage of fuel system or frozen pump. • Check fuel pump for any damage
8	Blower malfunction. Check blower	• Check blower wires for damage and proper connections • Check blower for any visible damage
9	Water pump malfunction	• Check wiring connections • Check water pump for debris • Check for cramped/collapsed hoses
10	Ignition failed or flame extinguish protection	• Check if there is fuel in tank • Check all fuel line connections • Check fuel pump operation • Check the glow pin operation • Check for blockage of air inlet / exhaust • Clean heater and replace glow pin screen to ensure proper fuel / air mixing.
11	Burner overheating protection	• Check water flow • Check overheat sensor
12	Outlet warm water temperature Overheating protection	• Check water level • Bleed water system • Check water flow • Check warm water temp, Sensor
13	Heater Locked Out due to too many flame outs or too many over heating events	• Check fuel system • Check overheat temp, sensor • Check water flow • Correct the problem then reboot the system. • Disconnect power, allow 15 minutes and re-connection again
14	Communication fault	• Check all wire connection.

Heater Components

Heater Assembly

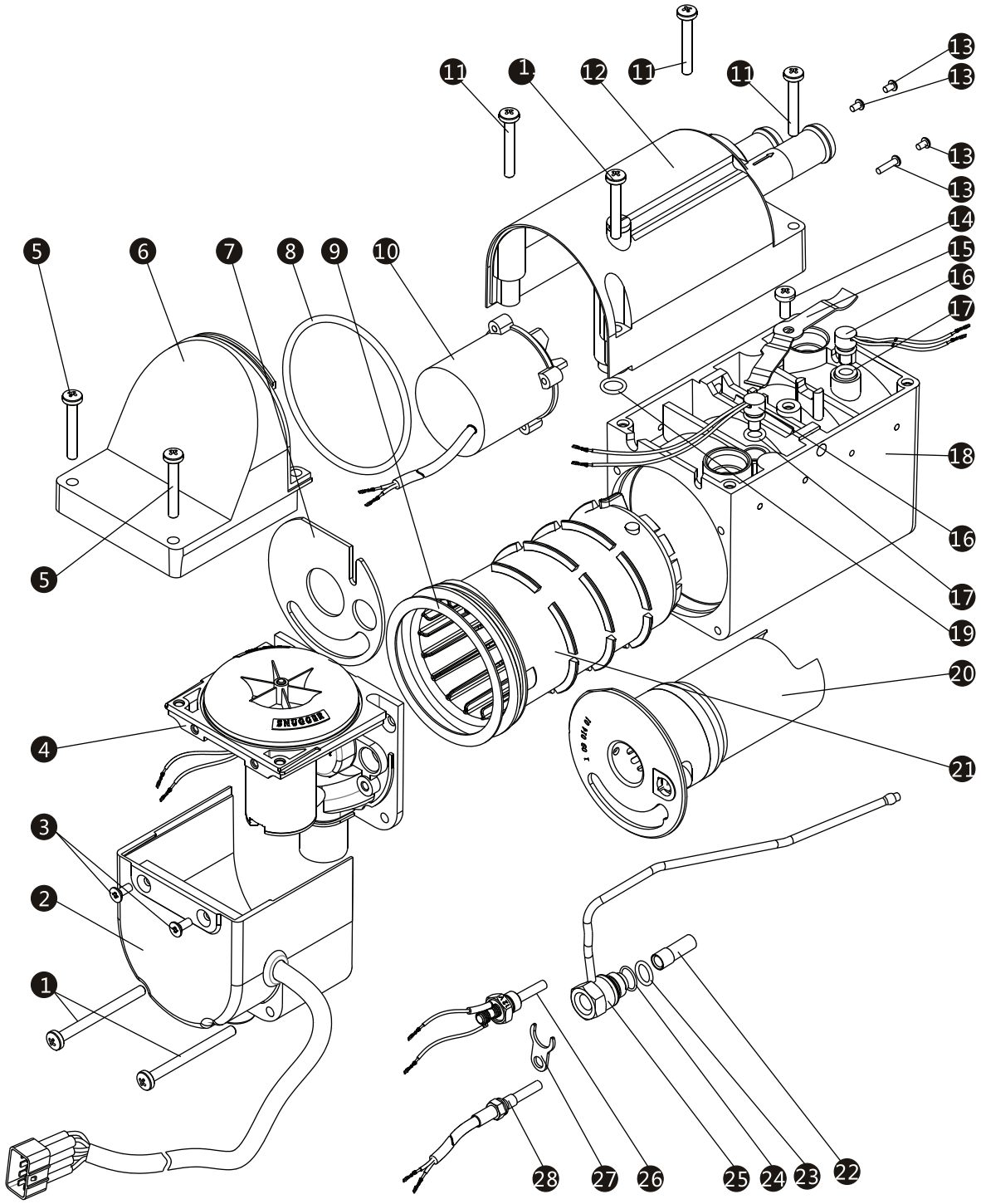

Heater Components

51W Replacement Parts

Item #	QTY	Part #	Description
1	2	P65W-X701	SHC Screw M5X65, PHP, All Wattages, Coolant
2	1	P51W-T301	ECU, PHP, 5 kW Small Body, Coolant, 12 V
2	3	P51W-F301	ECU, PHP, 5 kW Small Body, Coolant, 24 V
3	1	P51W-X701	CS Phillips Screw M4X10, PHP, 5 kW Small Body, Coolant
4	2	P51W-T102	Blower Motor Assembly, PHP, 5 kW Small Body, Coolant
4	1	P51W-F102	Blower Motor Assembly, PHP, 5 kW Small Body, Coolant
5	1	P51W-X705	SHC Screw M5X25, PHP, 5 kW Small Body, Coolant
6	1	P51W-X201	Blower Fan Cover, PHP, 5 kW Small Body, Coolant
7	1	P51W-X113	Gasket for Blower Burner, PHP, 5 kW Small Body, Coolant
8	1	P51W-X106	O Ring for Heat Exchanger, PHP, 5 kW Small Body, Coolant
9	2	P51W-X112	Gasket for Heat Exchanger, PHP, 5 kW Small Body, Coolant
10	1	P51W-T601	Water Pump with Housing, PHP, 5 kW Small Body, Coolant, 12 V
10	1	P51W-F601	Water Pump with Housing, PHP, 5 kW Small Body, Coolant, 24 V
11	1	P51W-X706	SHC Screw M5X35, PHP, 5 kW Small Body, Coolant
12	1	N/A	Housing for Water Pump included with Item # 10
13	2	P51W-X602	Phillips Screw Set for Water Pump, PHP, 5 kW Small Body, Coolant
14	2	P51W-X704	Pan Head Screw M5X12, PHP, 5 kW Small Body, Coolant
15	1	P51W-X104	Spring Clip for Securing Sensor, PHP, 5 kW Small Body, Coolant
16	2	P51W-X115	Temperature Sensors , PHP, 5 kW Small Body, Coolant
17	1	P51W-X109	O Ring for Temperature Sensors, PHP, 5 kW Small Body, Coolant
18	1	P51W-X101	Water Jacket, PHP, 5 kW Small Body, Coolant
19	1	P51W-X601	O Ring for Water Pump, PHP, 5 kW Small Body, Coolant
20	1	P51W-X105	Burner, PHP, 5 kW Small Body, Coolant
21	1	P51W-X111	Heat exchanger, PHP, 5 kW Small Body, Coolant
22	1	P51W-X103	Atomizer Screen, PHP, 5 kW Small Body, Coolant
23	1	P51W-X107	O Ring End Fuel Pipe Assembly, PHP, 5 kW Small Body, Coolant
24	1	P51W-X108	O Ring Middle Fuel Pipe Assembly, PHP, 5 kW Small Body, Coolant
25	1	P51W-X110	Fuel Pipe Assembly, PHP, 5 kW Small Body, Coolant
26	1	P51W-T101	Glow Pin, PHP, 5 kW Small Body, Coolant, 12 V
26	1	P51W-F101	Glow Pin, PHP, 5 kW Small Body, Coolant, 24 V
27	1	P51W-X114	Holder Clip for Fuel Pipe Assembly, PHP, 5 kW Small Body, Coolant
28	1	P51W-X102	Flame Sensor, PHP, 5 kW Small Body, Coolant

Vancouver | Toronto | Dallas

help@dksi.com

877-508-3900

DKSI.com